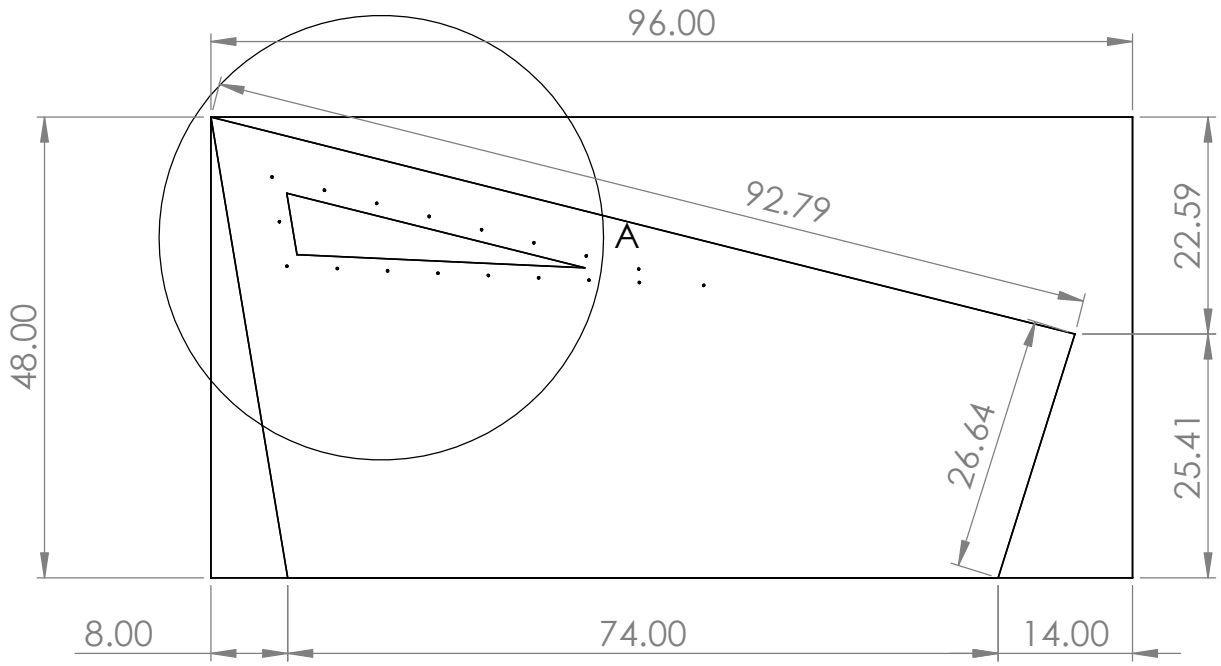

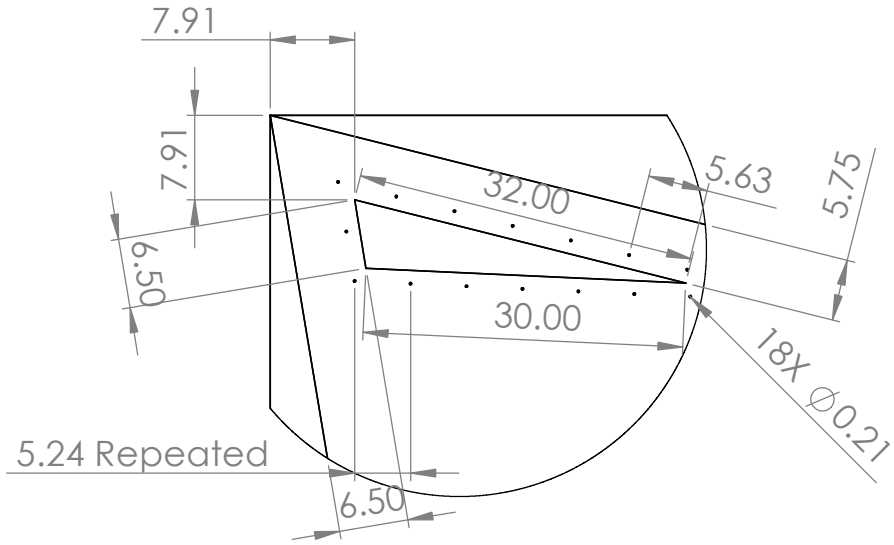

DETAIL A
SCALE 1 : 18

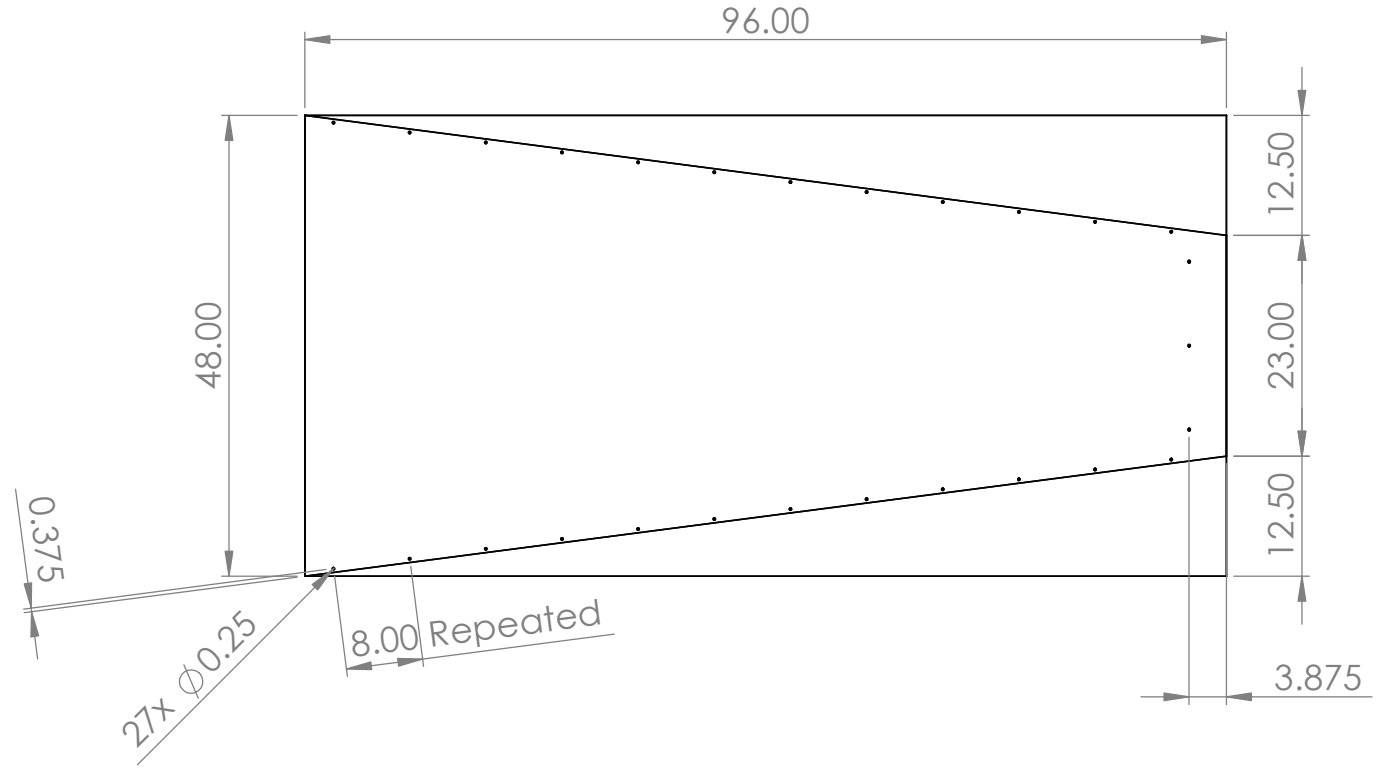
96.00
12.50
23.00
12.50
48.00
0.375
27x ∅0.25
8.00 Repeated
3.875

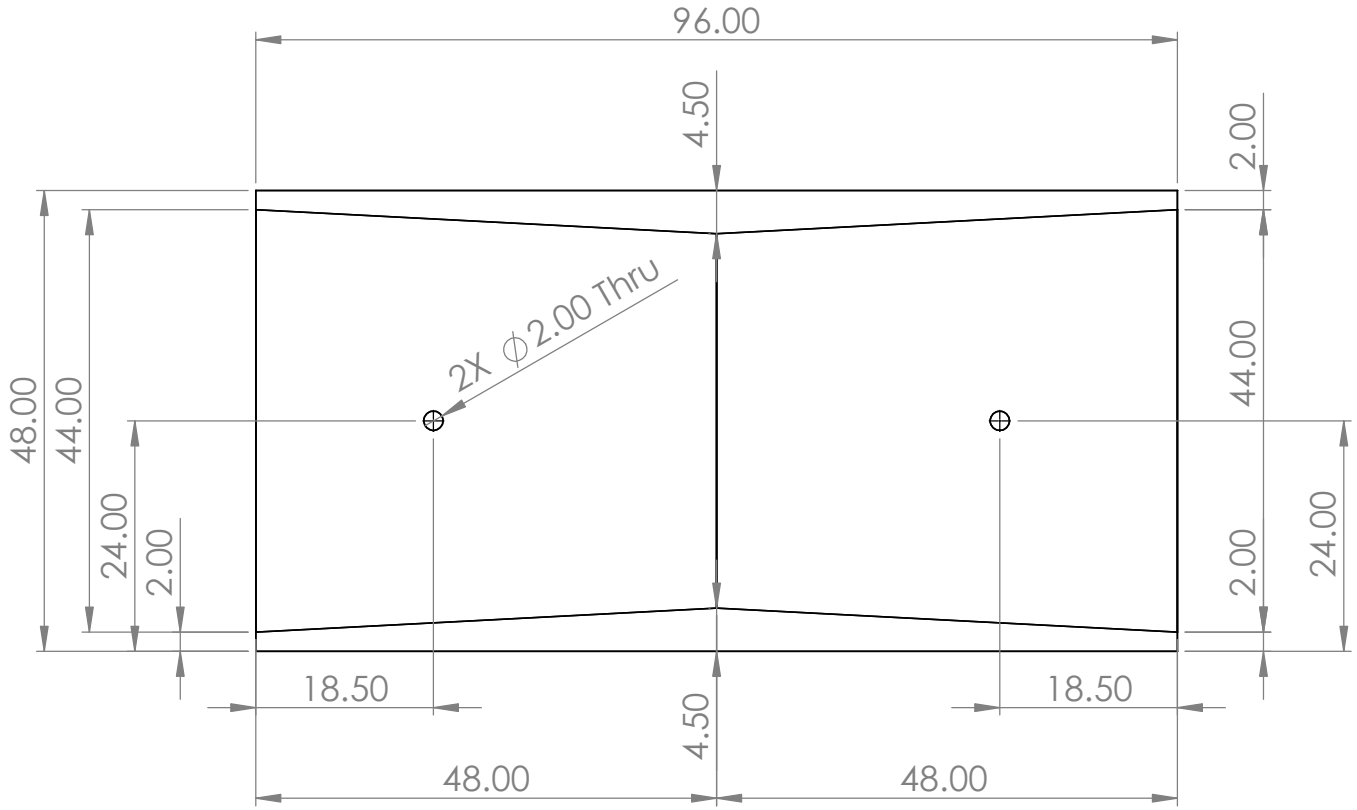
96.00
4.50
2.00
2X ∅2.00 Thru
48.00
44.00
24.00
2.00
44.00
24.00
2.00
18.50
18.50
4.50
48.00
48.00

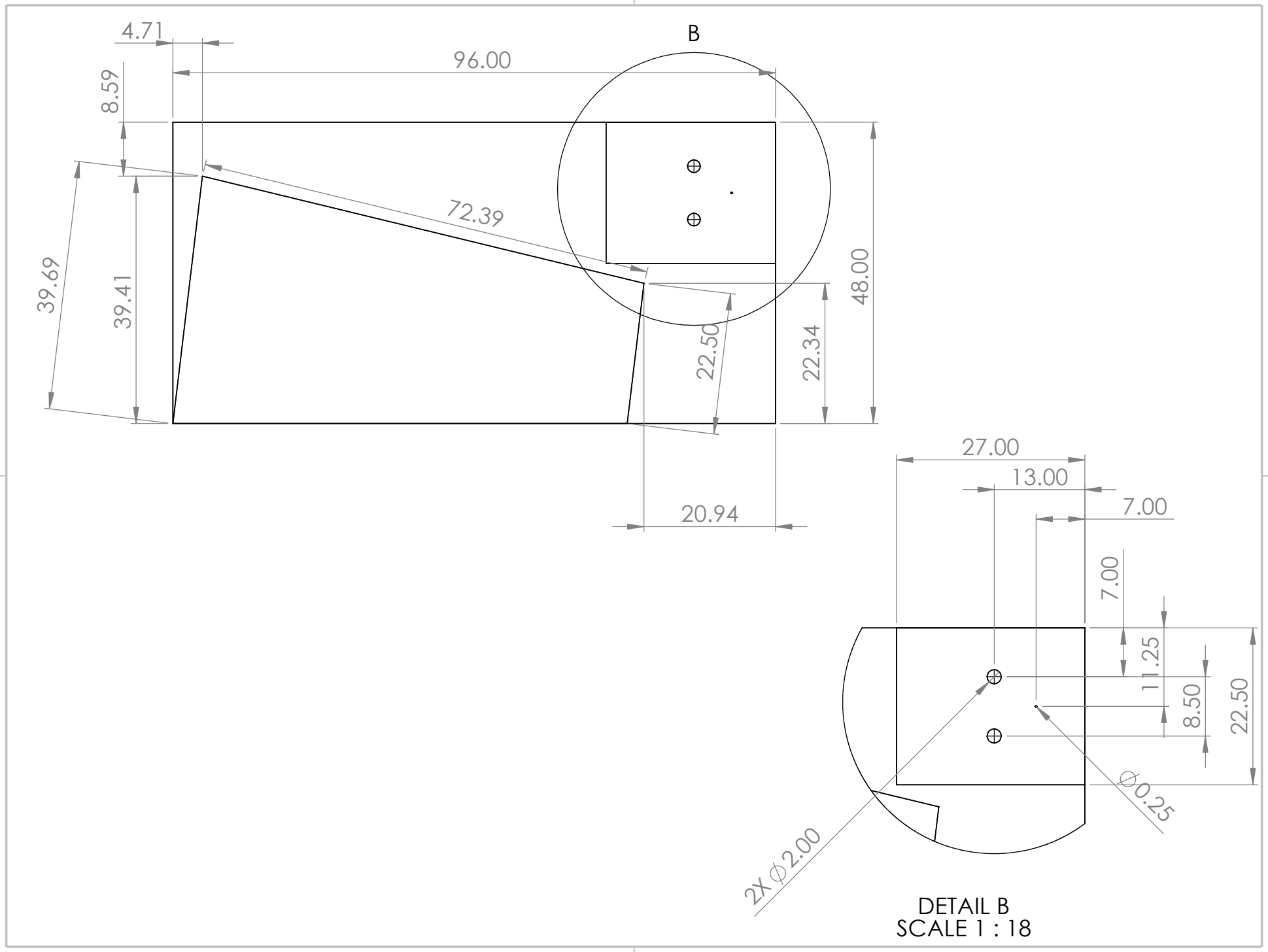
4.71
96.00
8.59
B
72.39
39.69
39.41
48.00
22.50
22.34
20.94
27.00
13.00
7.00
7.00
11.25
8.50
22.50
⌀0.25
2X ⌀2.00
DETAIL B
SCALE 1 : 18